MF600

6 LEVEL FLAME 600MM INSERT

Flame height regulation	6 stages
Tank capacity	4.0 L
Maximum operation time	13 hours
With Glass	YES
Fuel	95% Bioethanol
Power supply	220-240V, 50 Hz
Max Output	500 Watts
Finish	Black Electroplate Finish
Top Plate	4mm Thickness 304 Stainless Steel

In: mm
[inch]

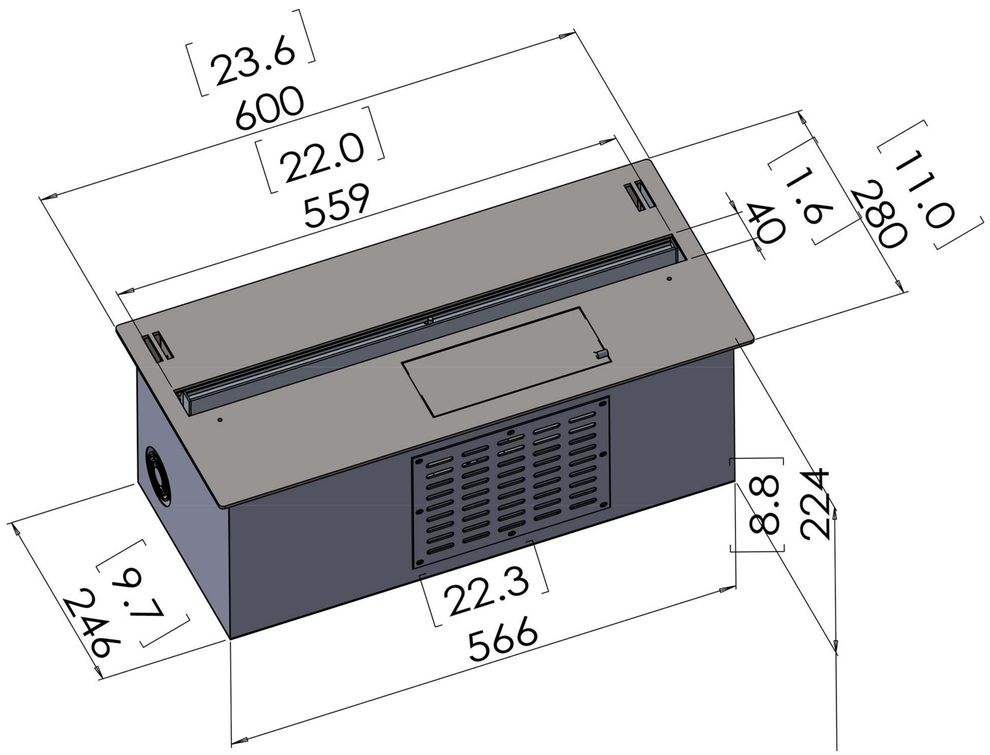

Housing Size:

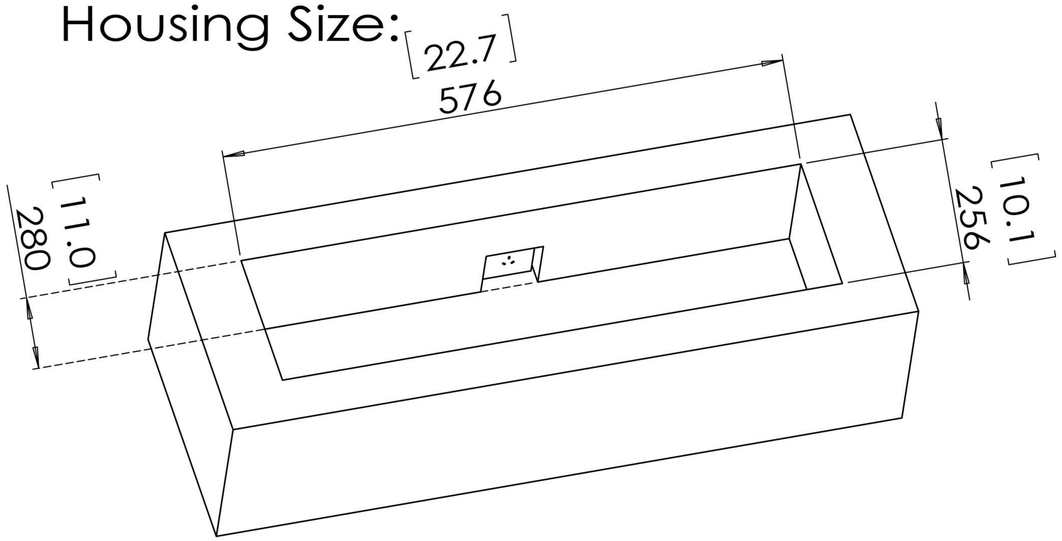

MF700

6 LEVEL FLAME 700MM INSERT

Flame height regulation	6 stages
Tank capacity	5.0 L
Maximum operation time	14 hours
With Glass	YES
Fuel	95% Bioethanol
Power supply	220-240V, 50 Hz
Max Output	620 Watts
Finish	Black Electroplate Finish
Top Plate	4mm Thickness 304 Stainless Steel

In: mm
[inch]

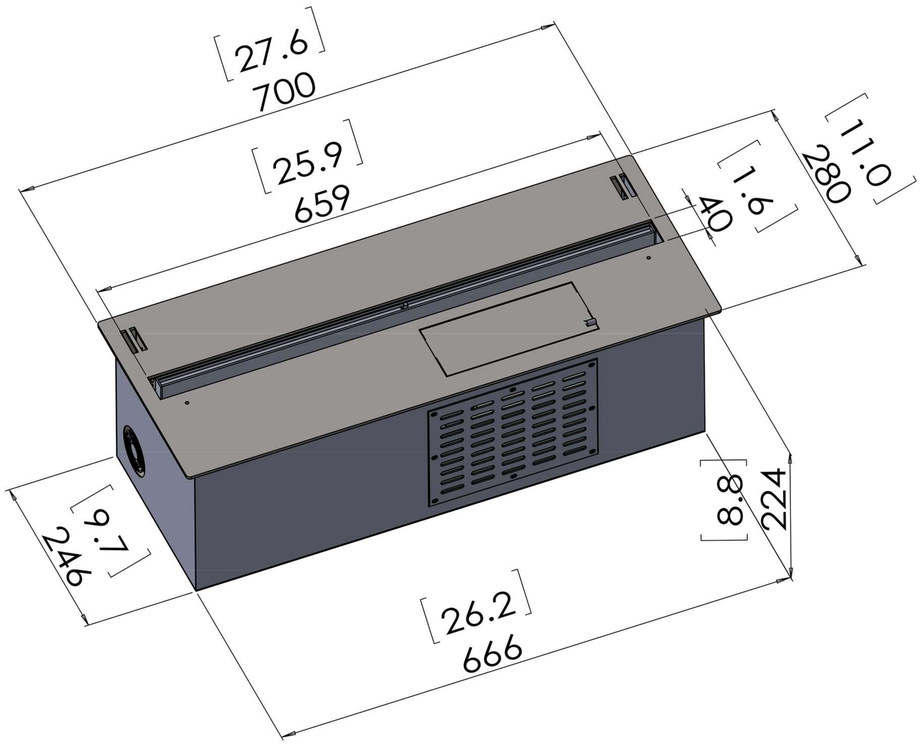

Housing Size:

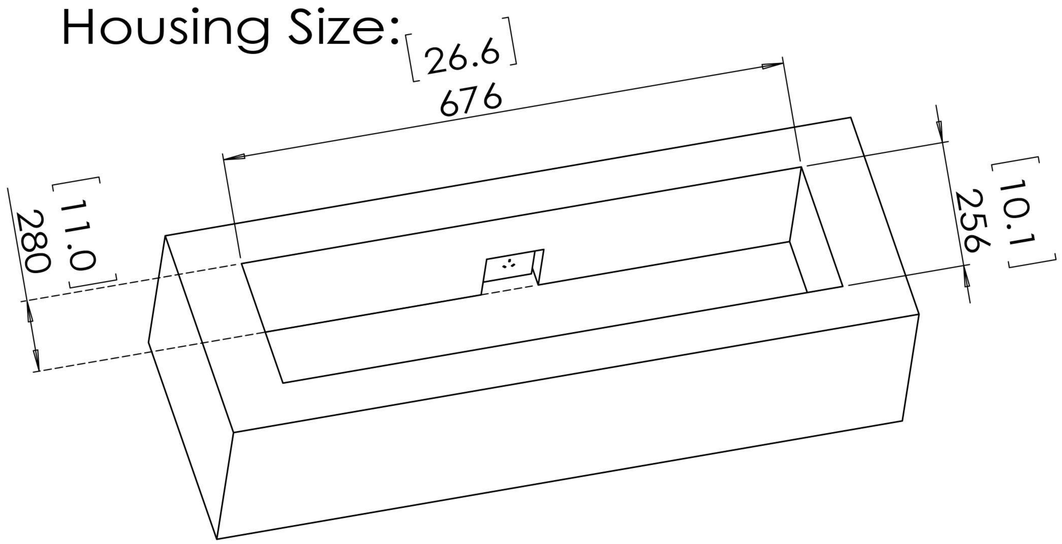

MF800

6 LEVEL FLAME 800MM INSERT

Flame height regulation	6 stages
Tank capacity	6.0 L
Maximum operation time	13 hours
With Glass	YES
Fuel	95% Bioethanol
Power supply	220-240V, 50 Hz
Max Output	750 Watts
Finish	Black Electroplate Finish
Top Plate	4mm Thickness 304 Stainless Steel

In: mm
[inch]

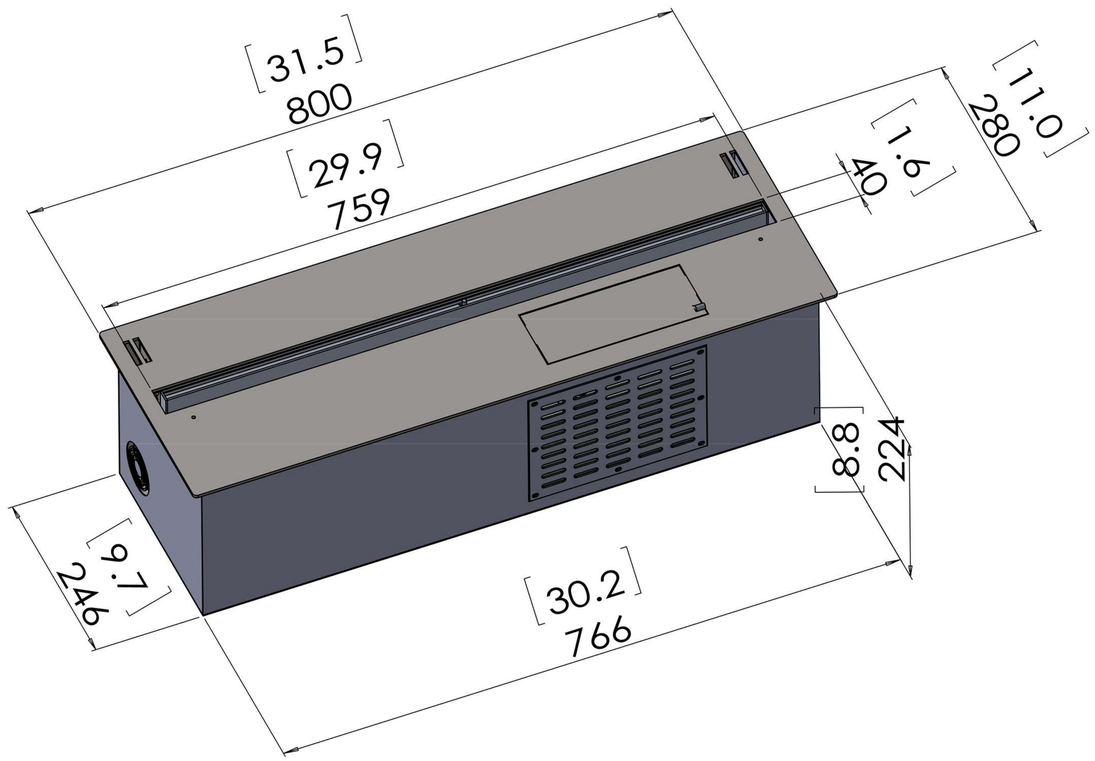

Housing Size:

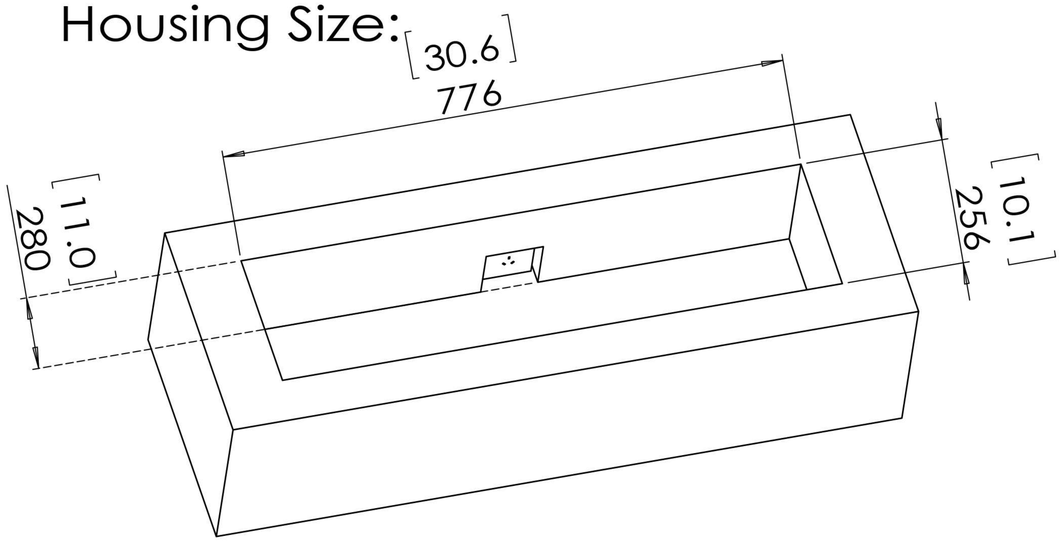

MF900

6 LEVEL FLAME 900MM INSERT

Flame height regulation	6 stages
Tank capacity	7.0 L
Maximum operation time	12.7 hours
With Glass	YES
Fuel	95% Bioethanol
Power supply	220-240V, 50 Hz
Max Output	880 Watts
Finish	Black Electroplate Finish
Top Plate	4mm Thickness 304 Stainless Steel

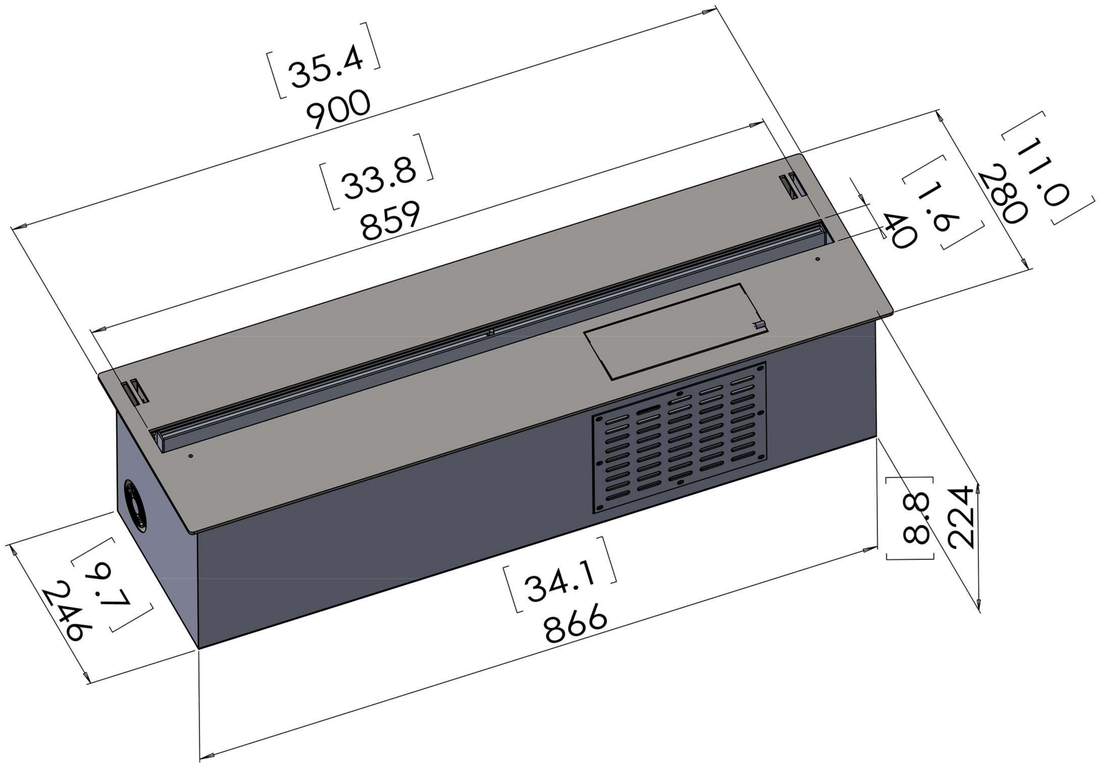

In: mm
[inch]

Housing Size:

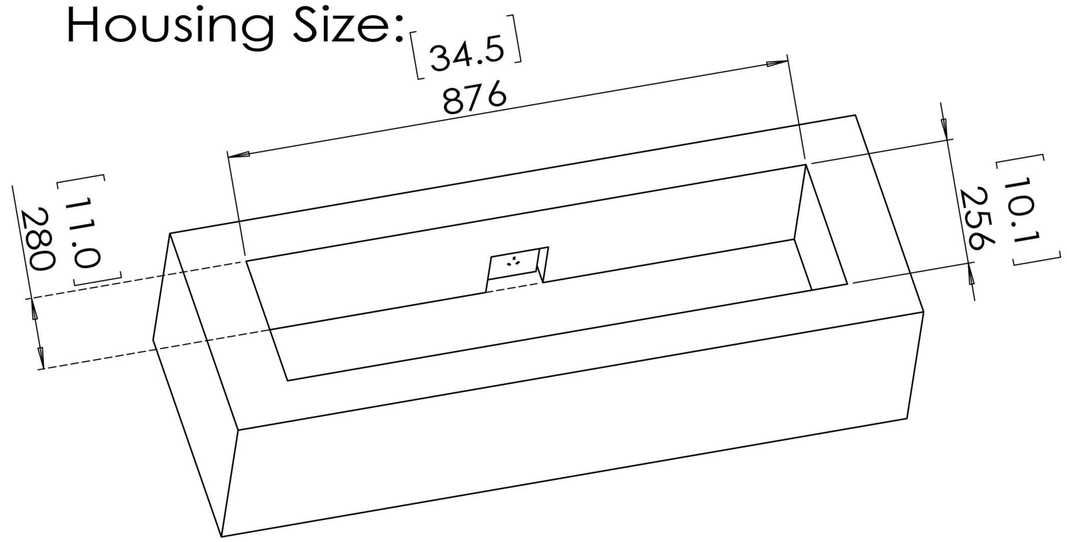

MF 1000

6 LEVEL FLAME 1000MM INSERT

Flame height regulation	6 stages
Tank capacity	8.0 L
Maximum operation time	12 hours
With Glass	YES
Fuel	95% Bioethanol
Power supply	220-240V, 50 Hz
Max Output	1020 Watts
Finish	Black Electroplate Finish
Top Plate	4mm Thickness 304 Stainless Steel

In: mm
[inch]

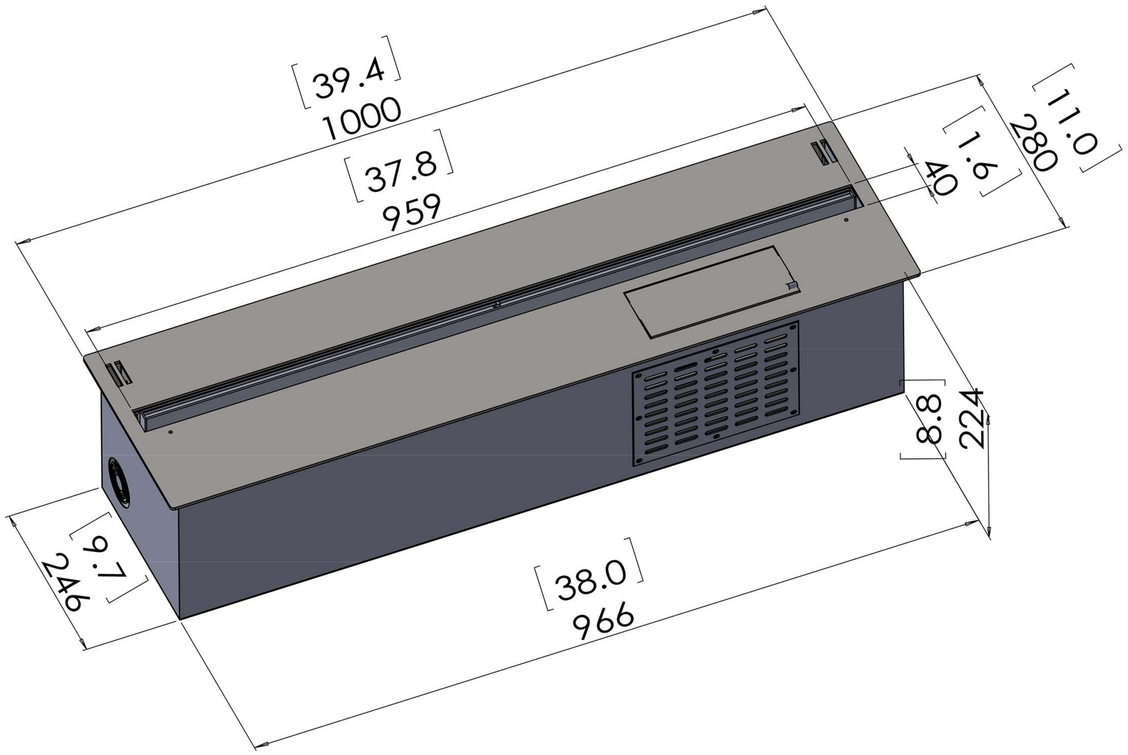

Housing Size:

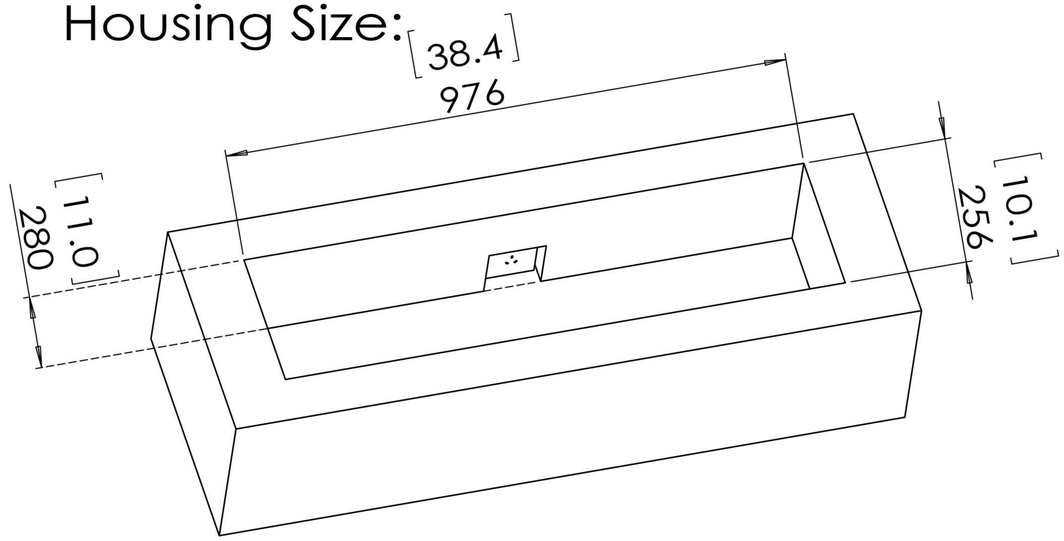

MF 1100

6 LEVEL FLAME 1100MM INSERT

Flame height regulation	6 stages
Tank capacity	9.0 L
Maximum operation time	12 hours
With Glass	YES
Fuel	95% Bioethanol
Power supply	220-240V, 50 Hz
Max Output	1150 Watts
Finish	Black Electroplate Finish
Top Plate	4mm Thickness 304 Stainless Steel

In: mm
[inch]

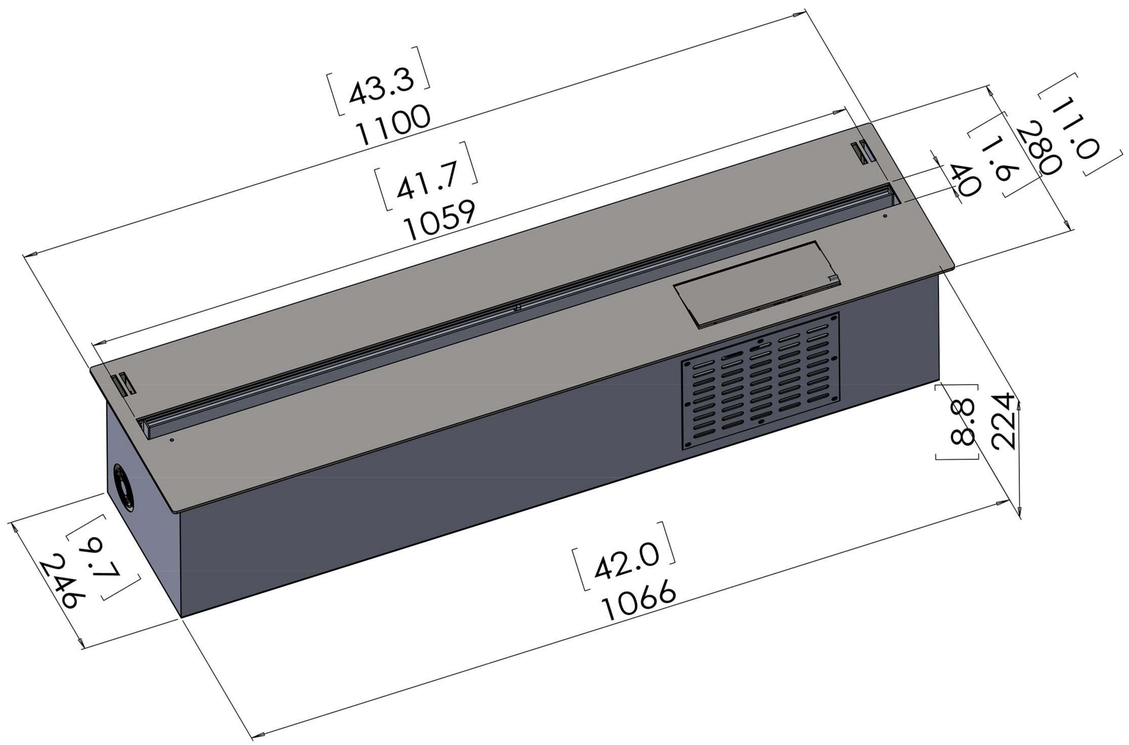

Housing Size:

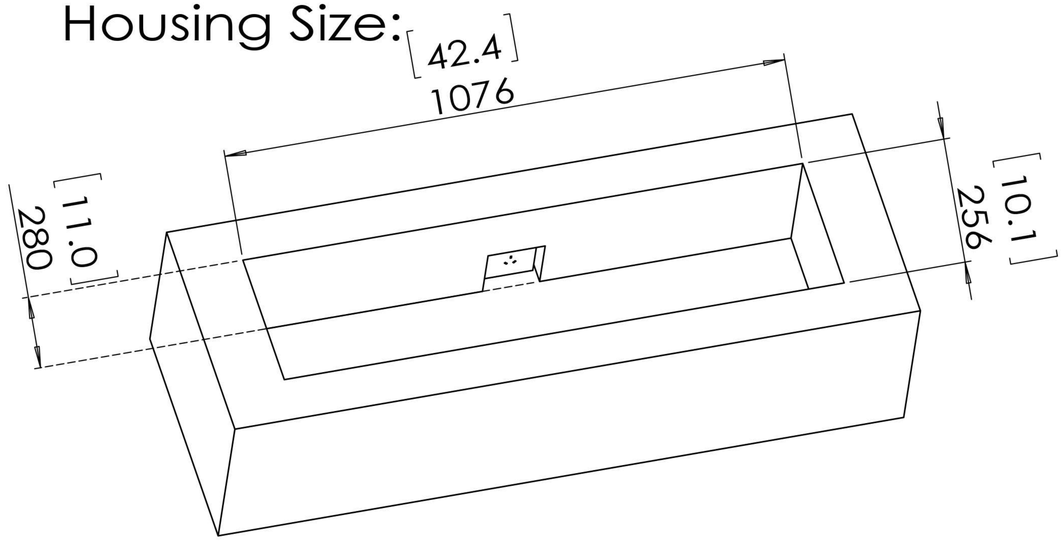

MF 1200

6 LEVEL FLAME 1200MM INSERT

Flame height regulation	6 stages
Tank capacity	10.0 L
Maximum operation time	11.7 hours
With Glass	YES
Fuel	95% Bioethanol
Power supply	220-240V, 50 Hz
Max Output	1280 Watts
Finish	Black Electroplate Finish
Top Plate	4mm Thickness 304 Stainless Steel

In: mm
[inch]

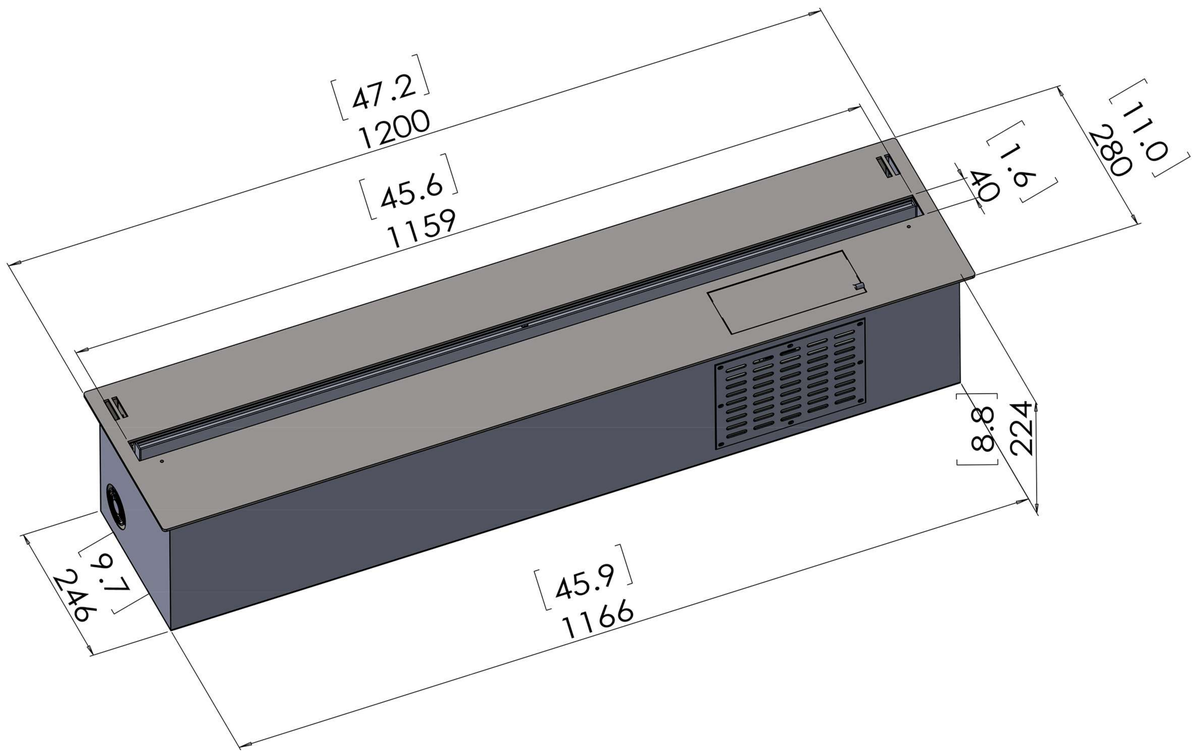

Housing Size:

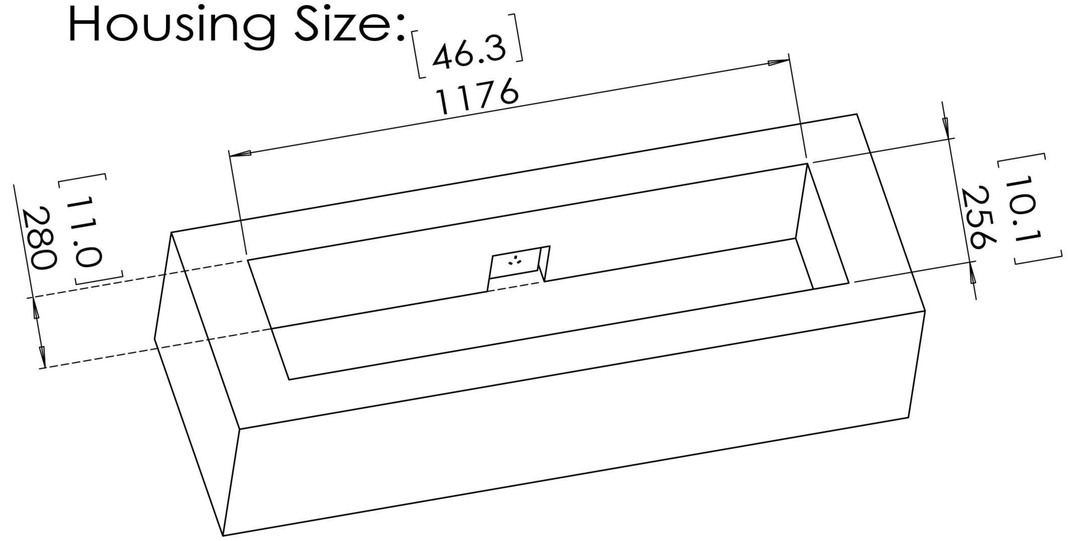

MF 1300

6 LEVEL FLAME 1300MM INSERT

Flame height regulation	6 stages
Tank capacity	11.0 L
Maximum operation time	11 hours
With Glass	YES
Fuel	95% Bioethanol
Power supply	220-240V, 50 Hz
Max Output	1400 Watts
Finish	Black Electroplate Finish
Top Plate	4mm Thickness 304 Stainless Steel

In: mm
[inch]

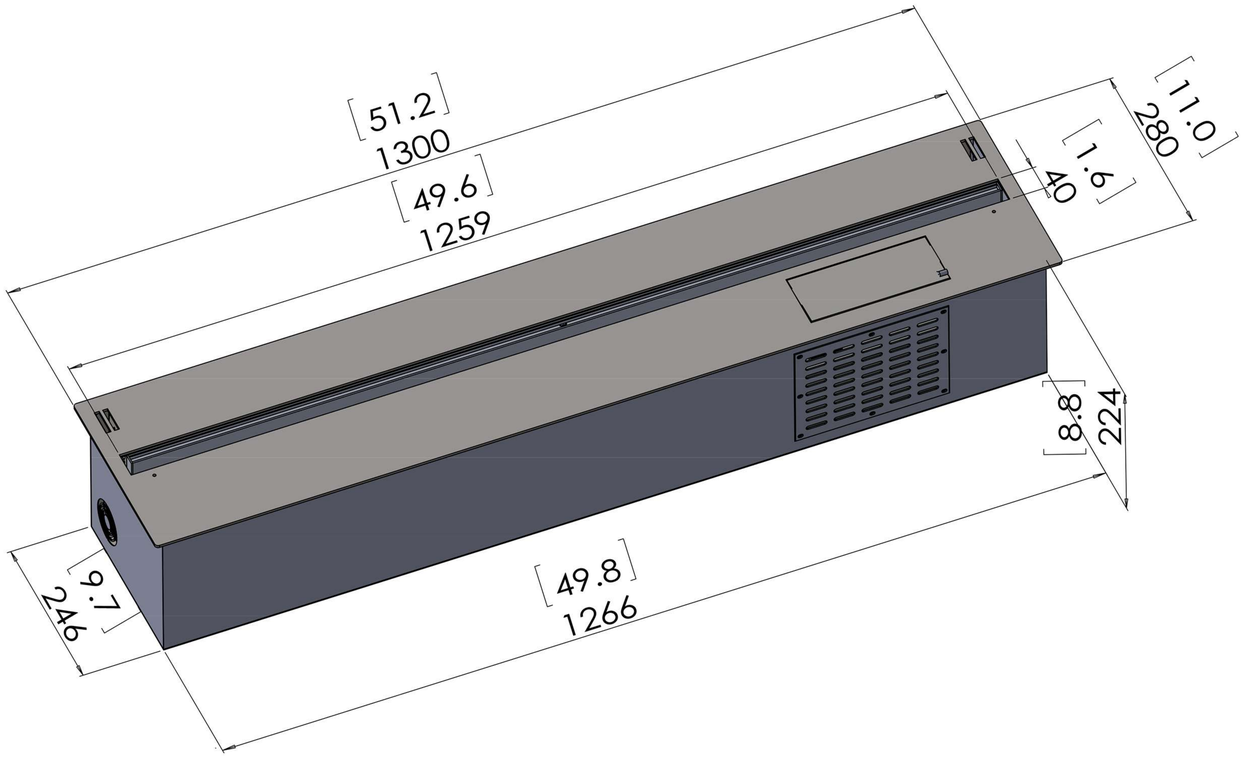

Housing Size:

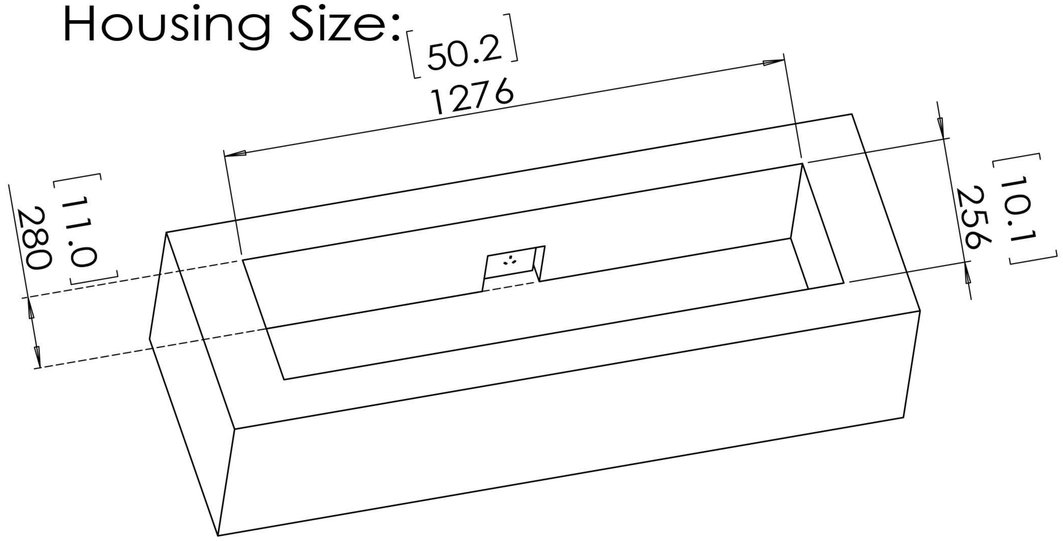

MF 1400

6 LEVEL FLAME 1400MM INSERT

Flame height regulation	6 stages
Tank capacity	12.0 L
Maximum operation time	11 hours
With Glass	YES
Fuel	95% Bioethanol
Power supply	220-240V, 50 Hz
Max Output	1500 Watts
Finish	Black Electroplate Finish
Top Plate	4mm Thickness 304 Stainless Steel

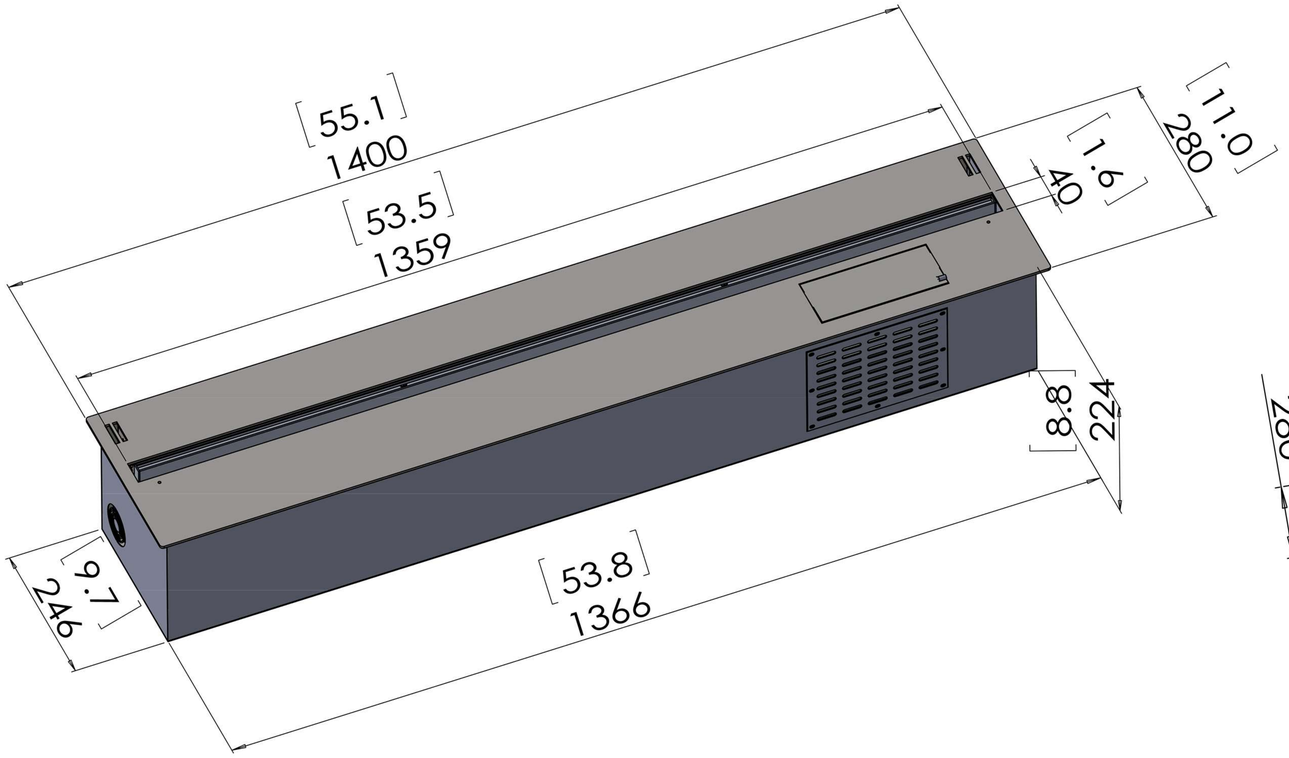

In: mm
[inch]

Housing Size:

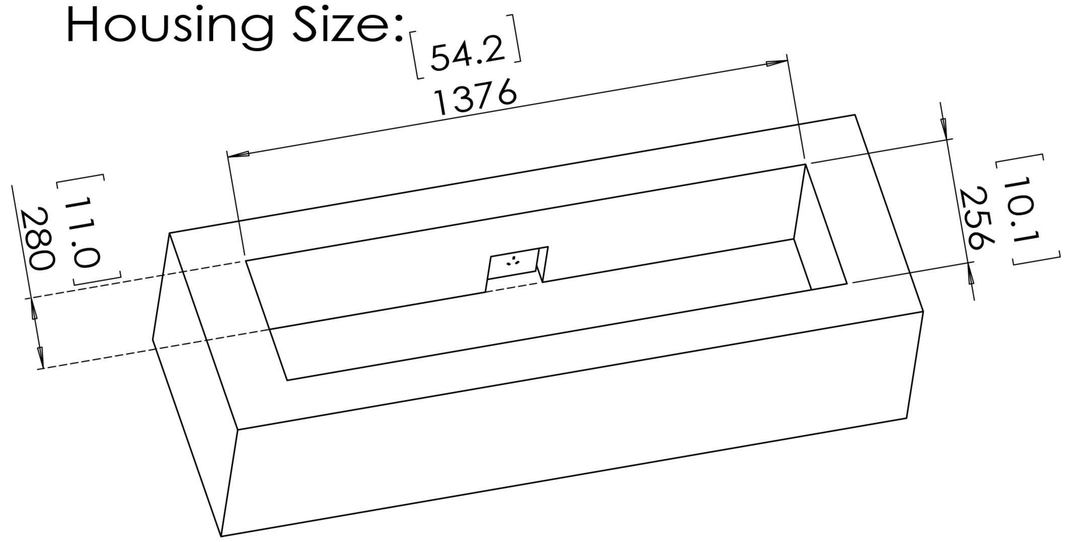

MF 1500

6 LEVEL FLAME 1500MM INSERT

Flame height regulation	6 stages
Tank capacity	13.0 L
Maximum operation time	10 hours
With Glass	YES
Fuel	95% Bioethanol
Power supply	220-240V, 50 Hz
Max Output	1620 Watts
Finish	Black Electroplate Finish
Top Plate	4mm Thickness 304 Stainless Steel

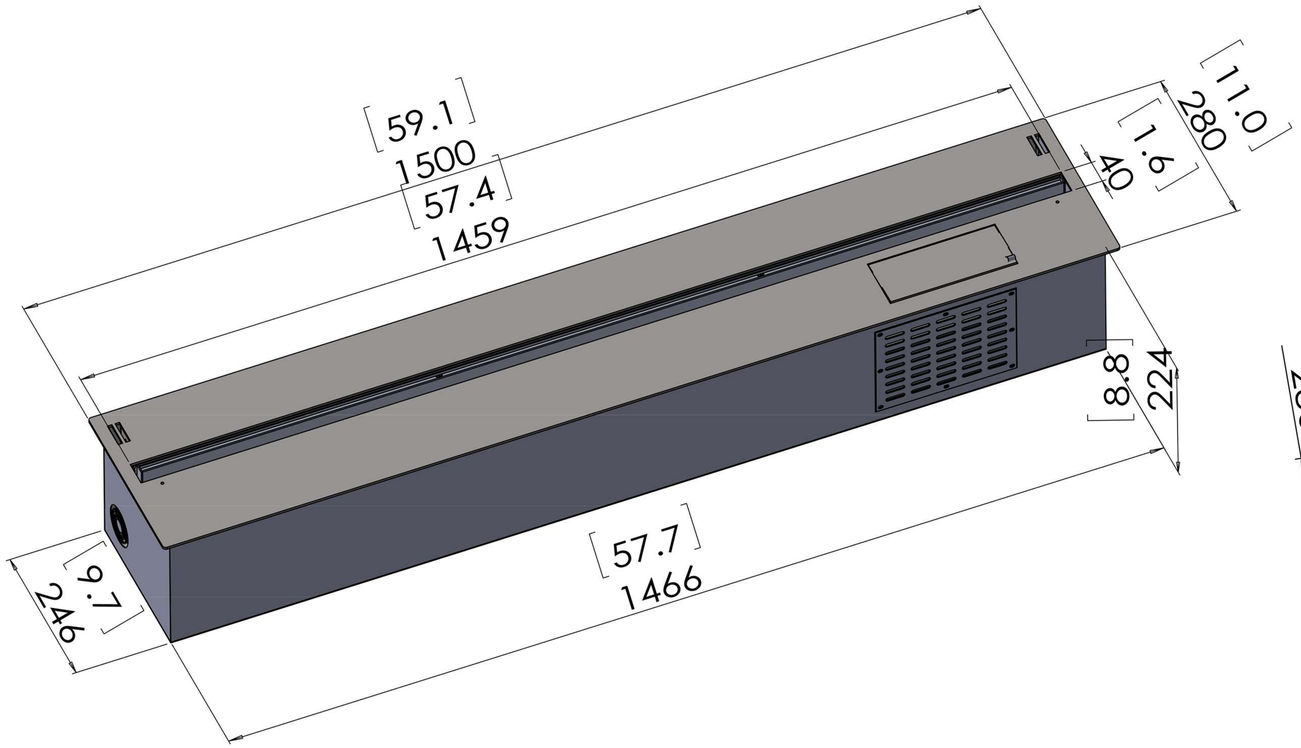

In: mm
[inch]

Housing Size:

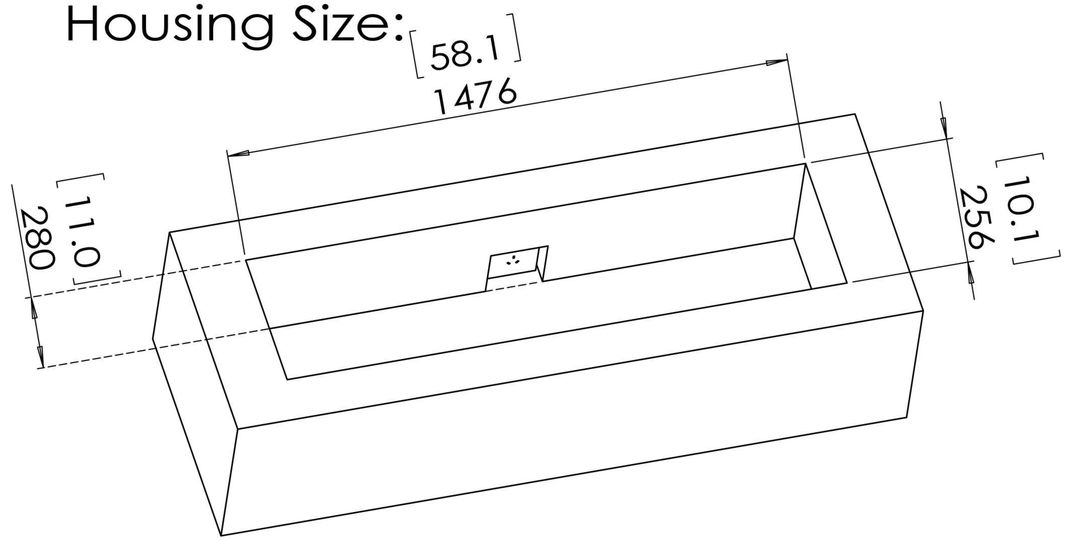

MF 1800

6 LEVEL FLAME 1800MM INSERT

Flame height regulation	6 stages
Tank capacity	16.0 L
Maximum operation time	10 hours
With Glass	YES
Fuel	95% Bioethanol
Power supply	220-240V, 50 Hz
Max Output	1620 Watts
Finish	Black Electroplate Finish
Top Plate	4mm Thickness 304 Stainless Steel

In: mm
[inch]

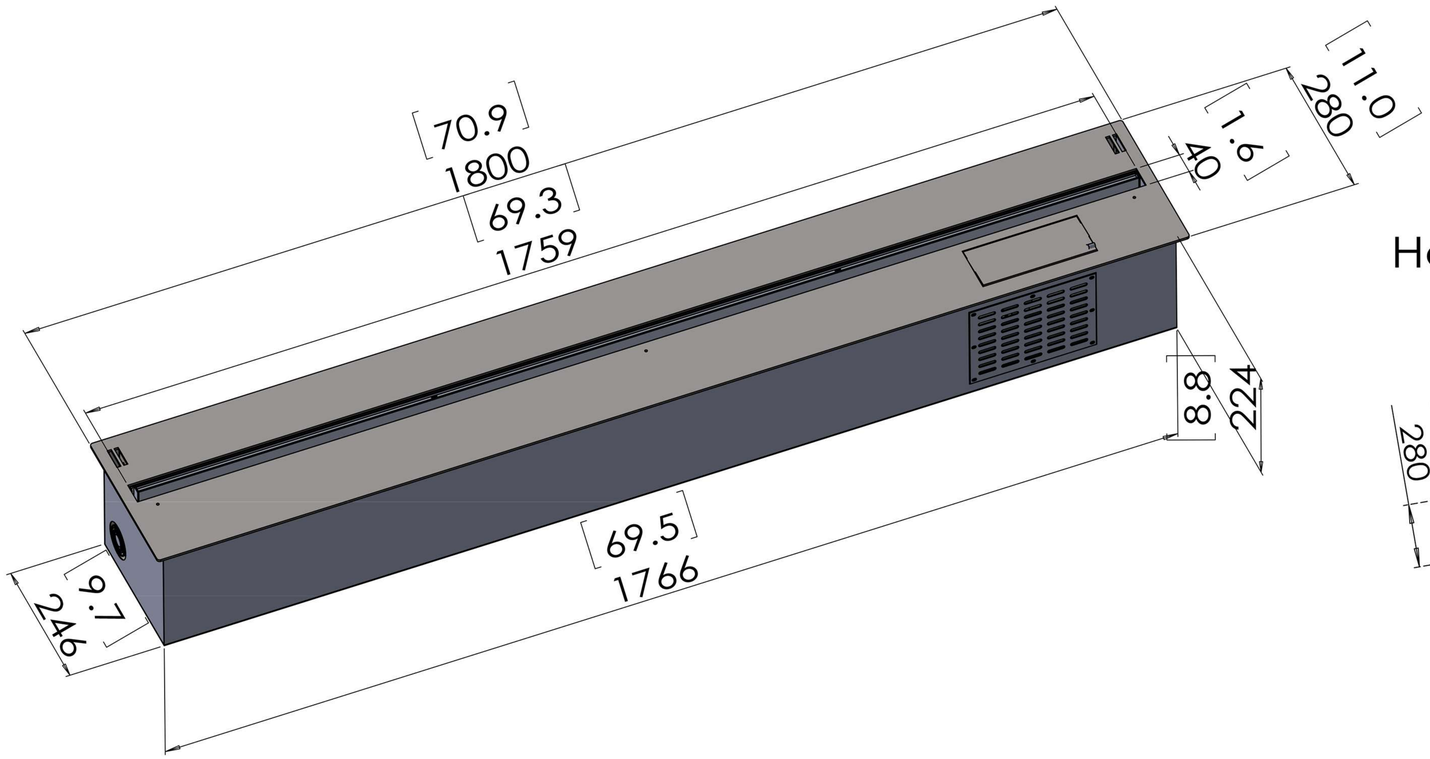

Housing Size:

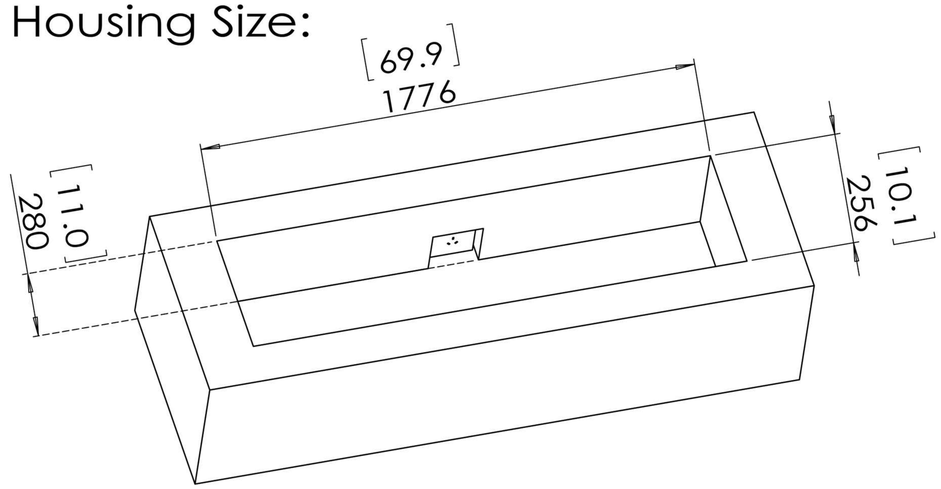

MF 2000

6 LEVEL FLAME 2000MM INSERT

Flame height regulation	6 stages
Tank capacity	18.0 L
Maximum operation time	9 hours
With Glass	YES
Fuel	95% Bioethanol
Power supply	220-240V, 50 Hz
Max Output	1620 Watts
Finish	Black Electroplate Finish
Top Plate	4mm Thickness 304 Stainless Steel

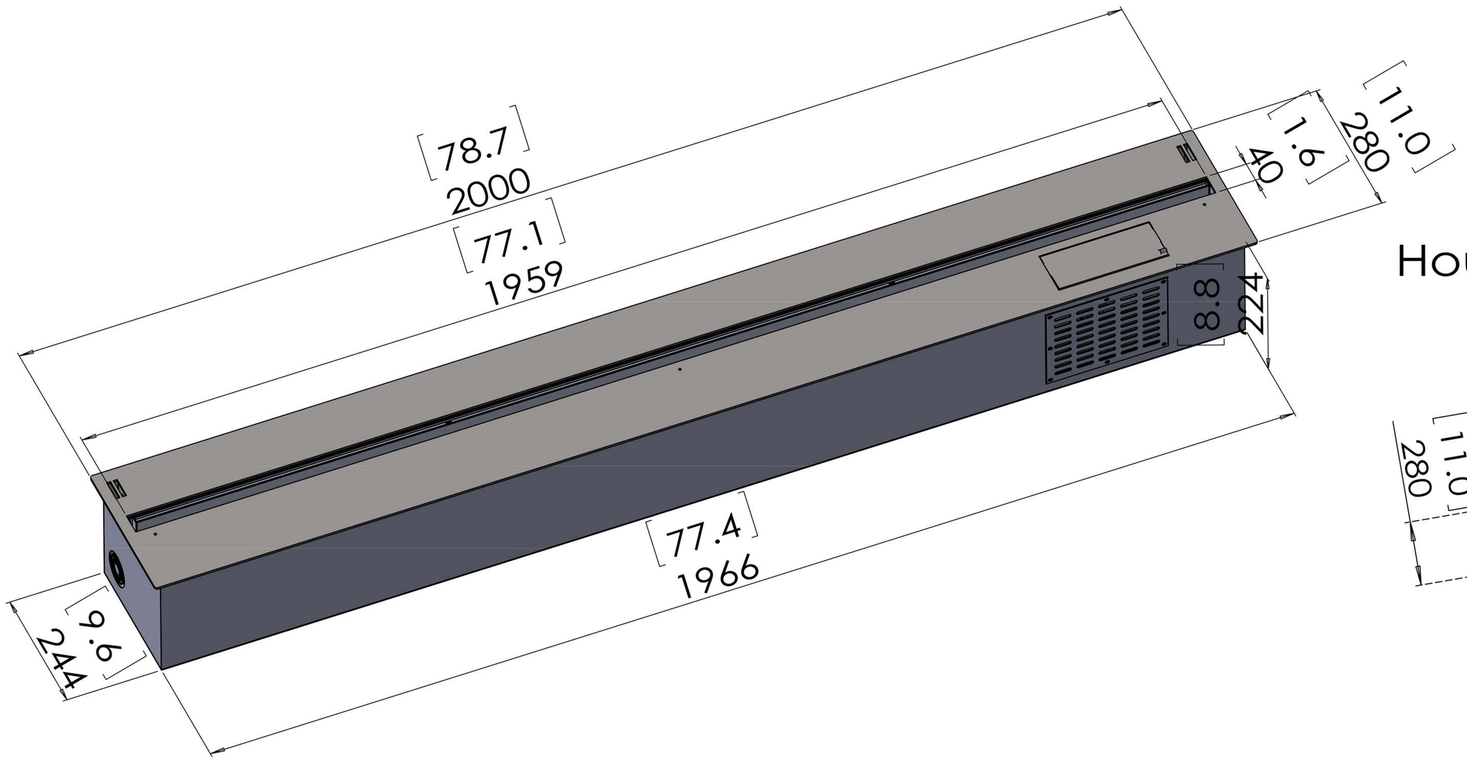
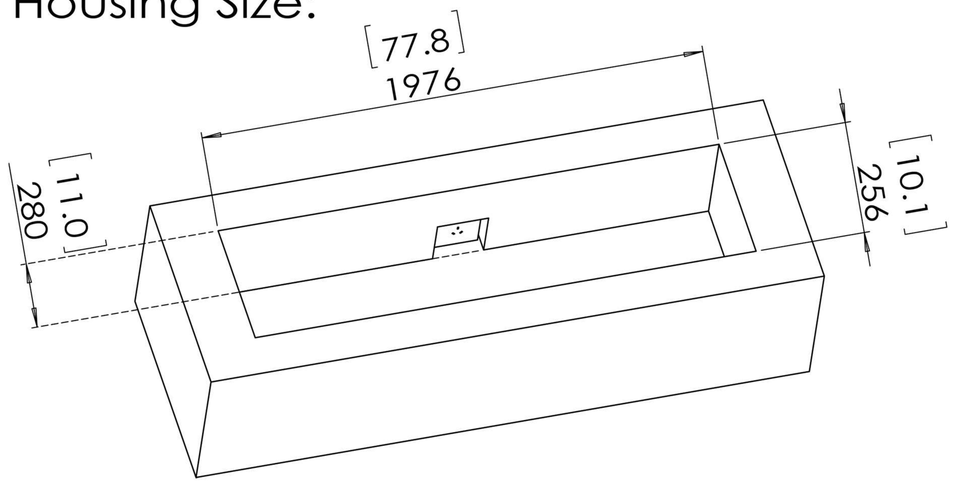
Housing Size: